Microsoft

winhec

Workshop Taipei 2015

Any questions please contact winhectpe@microsoft.com

Microsoft

Enabling new USB Connectivity Scenarios

Jr-Chiang Jaw, Microsoft

Windows 10 introduces a new wave of USB scenarios through Dual Role and USB Type-C

Agenda

- Session agenda
  - What is the ideal USB user experience
  - Introduction to USB Dual Role and USB Type-C
  - How to build a USB Dual Role and USB Type-C capable system
  - Software support for USB Dual Role and USB Type-C on Windows and requirements for OEMs

Introduction to ideal USB user experience

What is the ideal USB user experience?

- When you connect to another device using USB, it “just works”

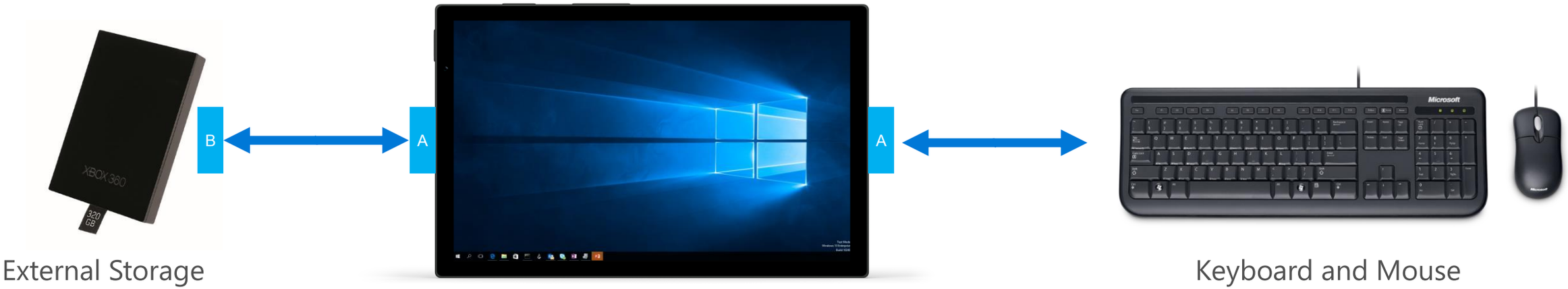

What is the ideal USB user experience?

When you connect to another device using USB, it "just works"

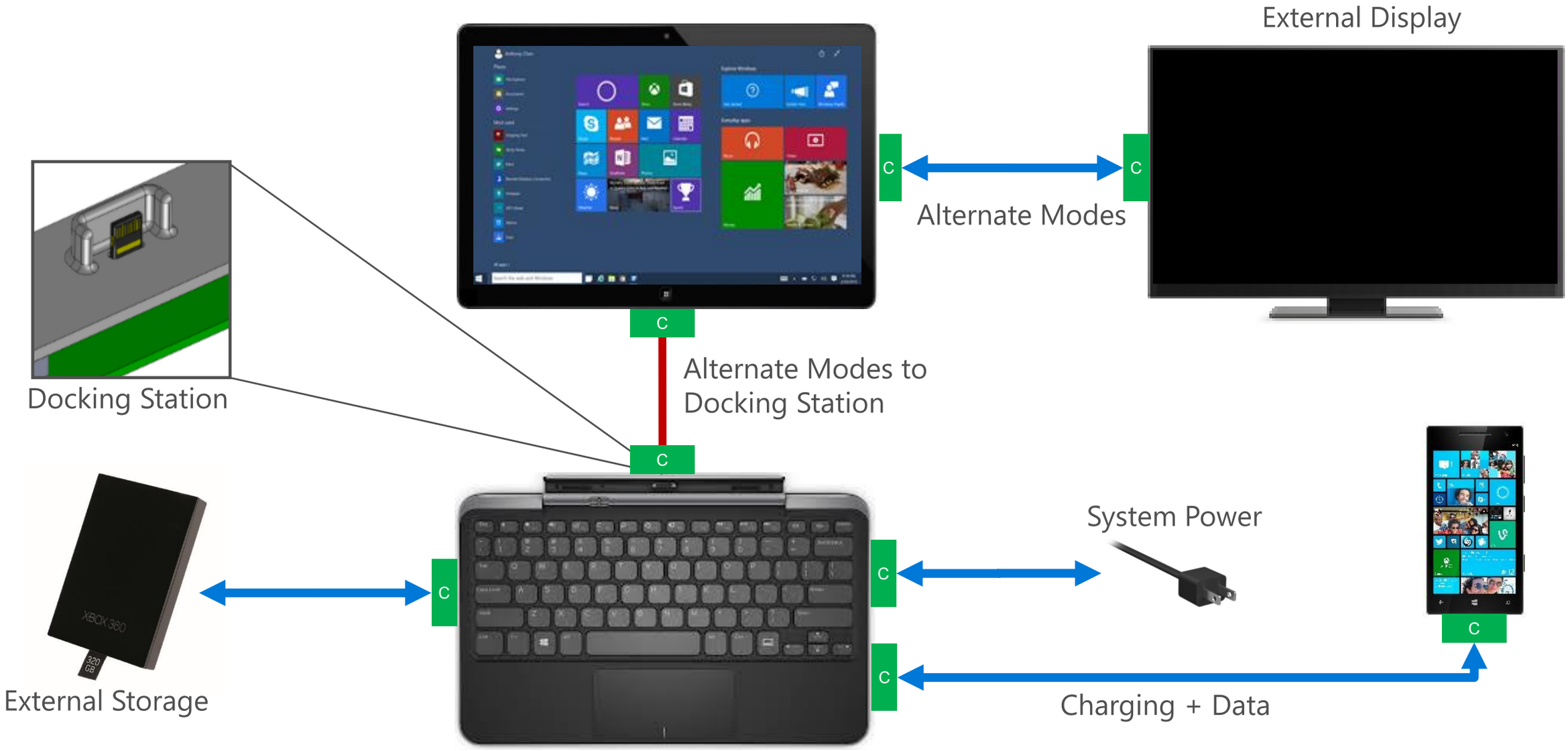

Introduction to USB Dual Role and USB Type-C

Introduction to Dual Role

- USB Basics
- Two types of USB modes: USB Host and USB Device
- The USB Host initiates data transfers and traditionally provides power
- The USB Device responds to data requests and traditionally consumes power

- What is Dual Role?
- Dual Role is the ability for a device to behave as either USB Host or USB Device
- Example: Phone can either connect to a PC as a USB MTP Device, or connect to other USB peripherals as a USB Host
- Terminology for Dual Role ports:
  - The port in USB Host mode is the “Downstream Facing Port” (DFP)
  - The port in USB Device mode is the “Upstream Facing Port” (UFP)

Introduction to USB Type-C

- The new USB Type-C Connector
  - New 24-pin, flip-able, reversible, USB connector approximately the same size as the USB micro-B connector
  - Support for USB 3.1 Gen2 (10Gb/s)
  - Cable has power carrying capacity of at least 5V, 3A
  - Adapters defined for compatibility with older USB devices
- New features
  - Power Delivery allows devices to provide and consume up to 20V, 5A
  - Alternate Modes enables non-USB protocols to go through the USB Type-C connector
    - Examples of Alternate Modes: DisplayPort, Thunderbolt, MHL
- When will we see USB Type-C enabled devices?
  - We expect to see a number of early products in 2H' 2015
  - Welcome to visit USB-C booth

How to build a USB Dual Role and USB Type-C capable system

USB Type-C Pin Map

Receptacle

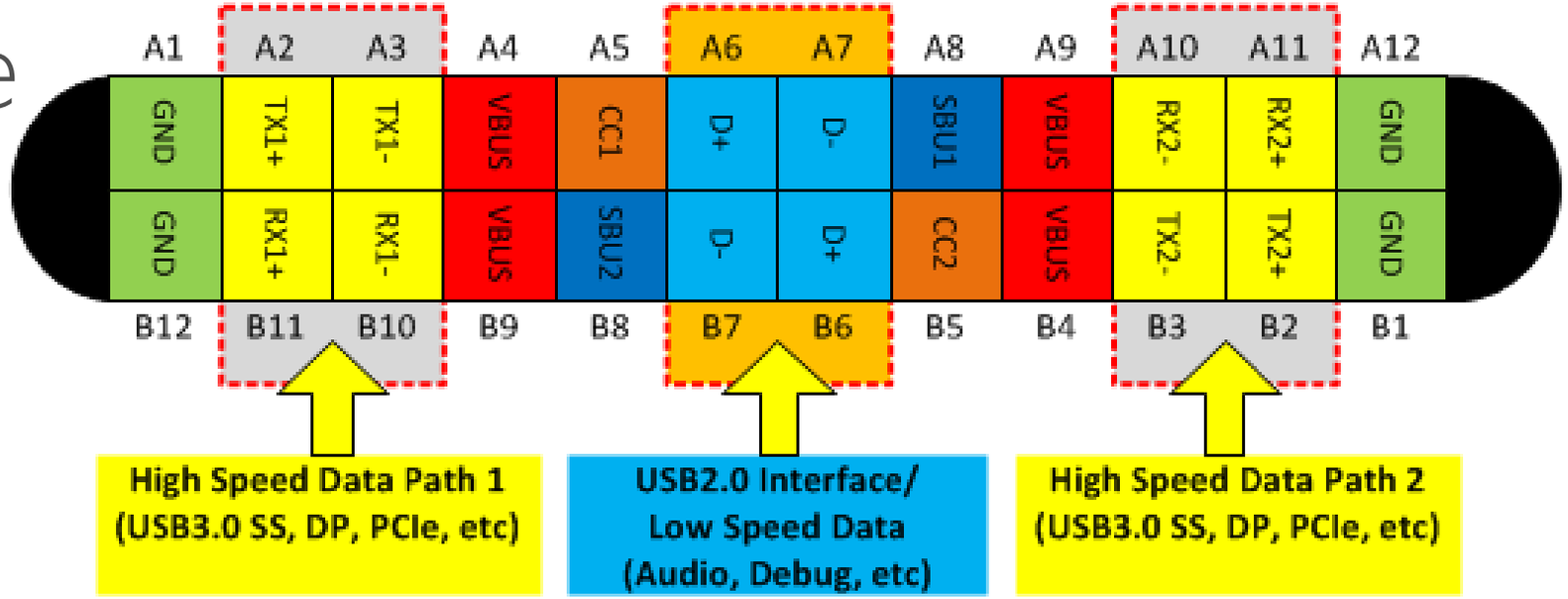

Plug

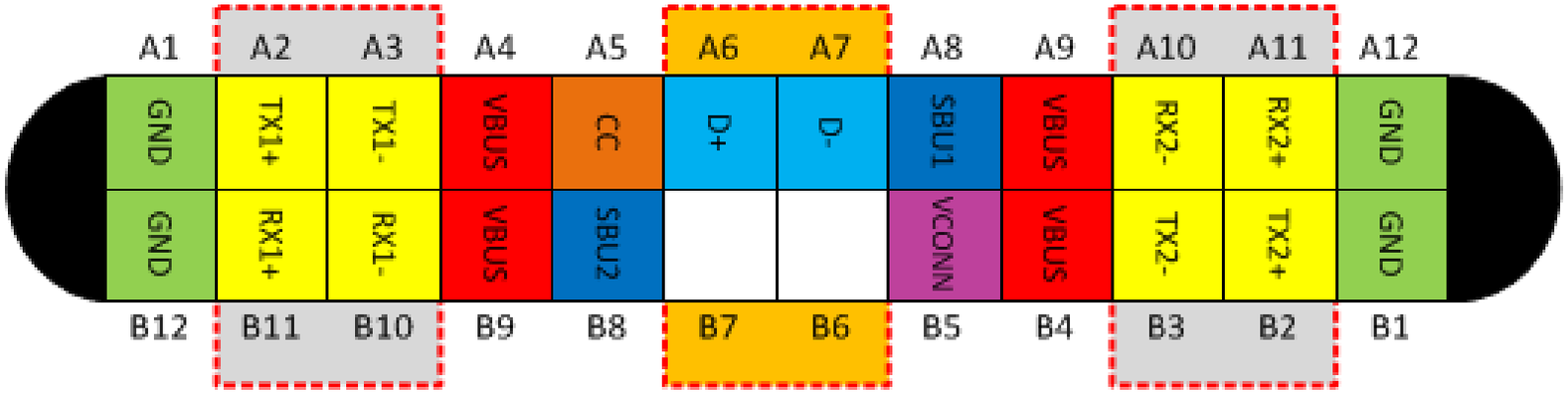

Configuration Channel (CC1/CC2)

- 2 CC pins in the receptacles, ONLY one CC pins/wire in cable/plug FP

- Functionally, the configuration channel is used to serve the following purposes:
  - **Detect** connect of USB ports, e.g. a DFP to a UFP
  - **Resolve cable orientation** and twist connections to establish USB data bus routing
  - **Establish DFP and UFP roles** between two connected ports (Host/Device)
  - **Dual Role Port (DRP)** toggling between DFP and UFP
  - **Discover and configure power**: USB Type-C Current modes or USB Power Delivery
  - **Discover and configure optional Alternate and Accessory modes**
  - **Repurpose as V_{CONN}** when it is unused

Vconn

- CC pins on receptacle that is not connected to via the CC wires is repurposed for Vconn
- Vconn supply power to active cables to power the circuit
- Prevent Active Cable to vampire any of the power from VBUS
- VCONN = +5V @ 500mA max

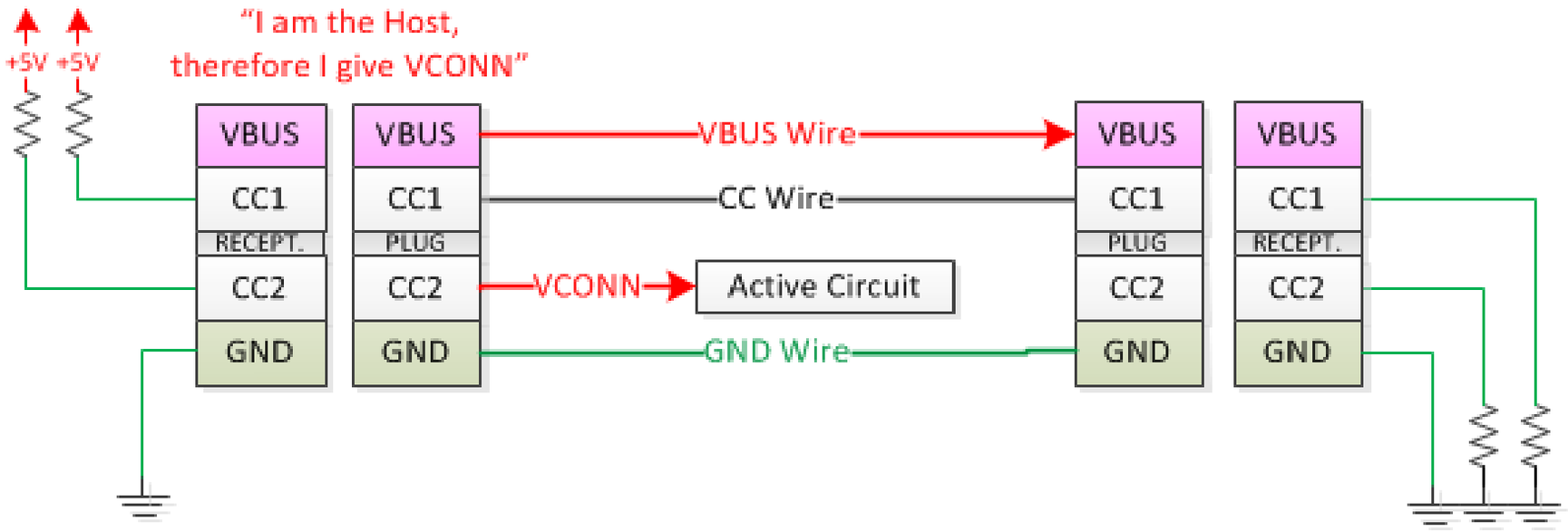

USB Type-C VBUS Power Options

Power Options priority

Mode of Operation	Nominal Voltage	Maximum Current	Notes
USB 2.0	5 V	500 mA	Default Current, based on definitions in the base specifications
USB 3.1	5 V	900 mA	
USB BC 1.2	5 V	Up to 1.5 A	Legacy charging
USB Type-C Current @ 1.5 A	5 V	1.5 A	Supports higher power devices
USB Type-C Current @ 3 A	5 V	3 A	Supports higher power devices
USB PD	Configurable up to 20 V	Configurable up to 5 A	Directional control and power level management

- Very flexible power options
- USB PD is not mandatory
- USB PD (Structured VDM) required to support Alternate Mode
- VBUS should be off until device detected

USB Type-C Power

- Two options:
  - 5V@ 1.5A
  - 5V@ 3A
- Advertise through CC pins pull up on DFP (Rp)

VBUS Power	CC Pull Up (4.75-5.5V)	CC Pull Up (3.3V +/- 5%)
Default USB Power	56k Ohm +/-20%	36k Ohm +/-20%
1.5A @ 5V	22k Ohm+/-5%	12k Ohm+/-5%
3.0A @ 3V	10k Ohm+/-5%	4.7k Ohm+/-5%

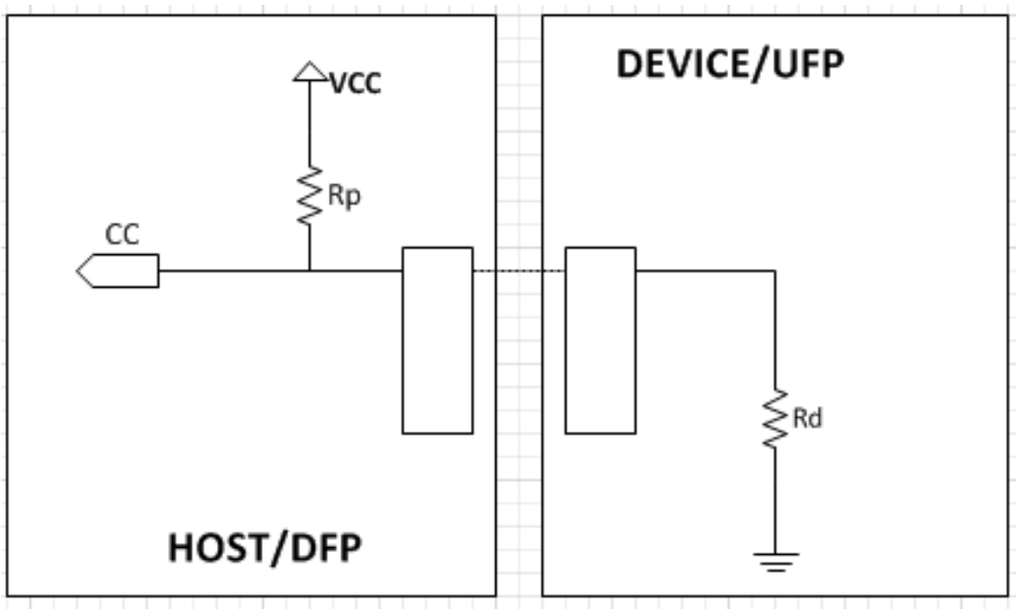

New Components for USB Type-C

- Crossbar Muxes
- Muxes/Switches
- Redriver/retimer
- Cables/Connectors
- USB PD Controller
- ESD protection/EMI reduction component

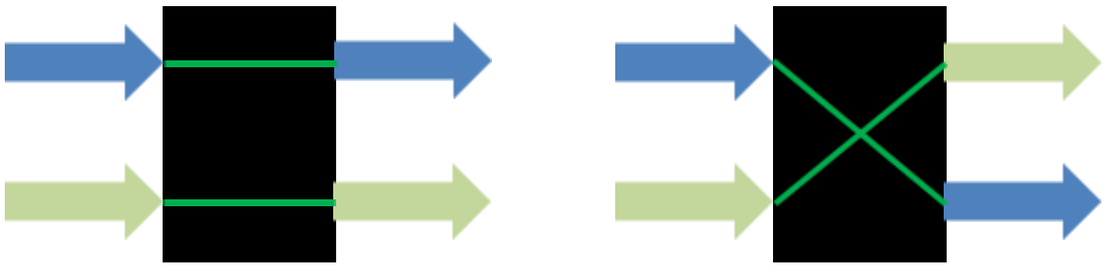

Crossbar Mux

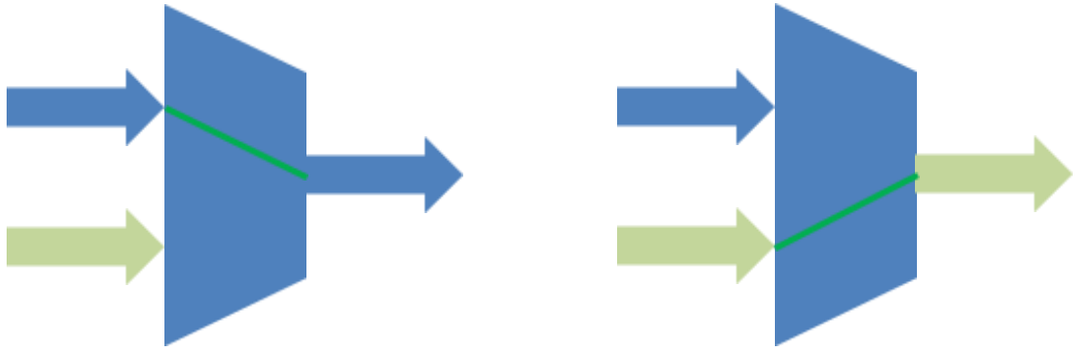

Mux

No MUX USB Type-C Solution (USB-only)

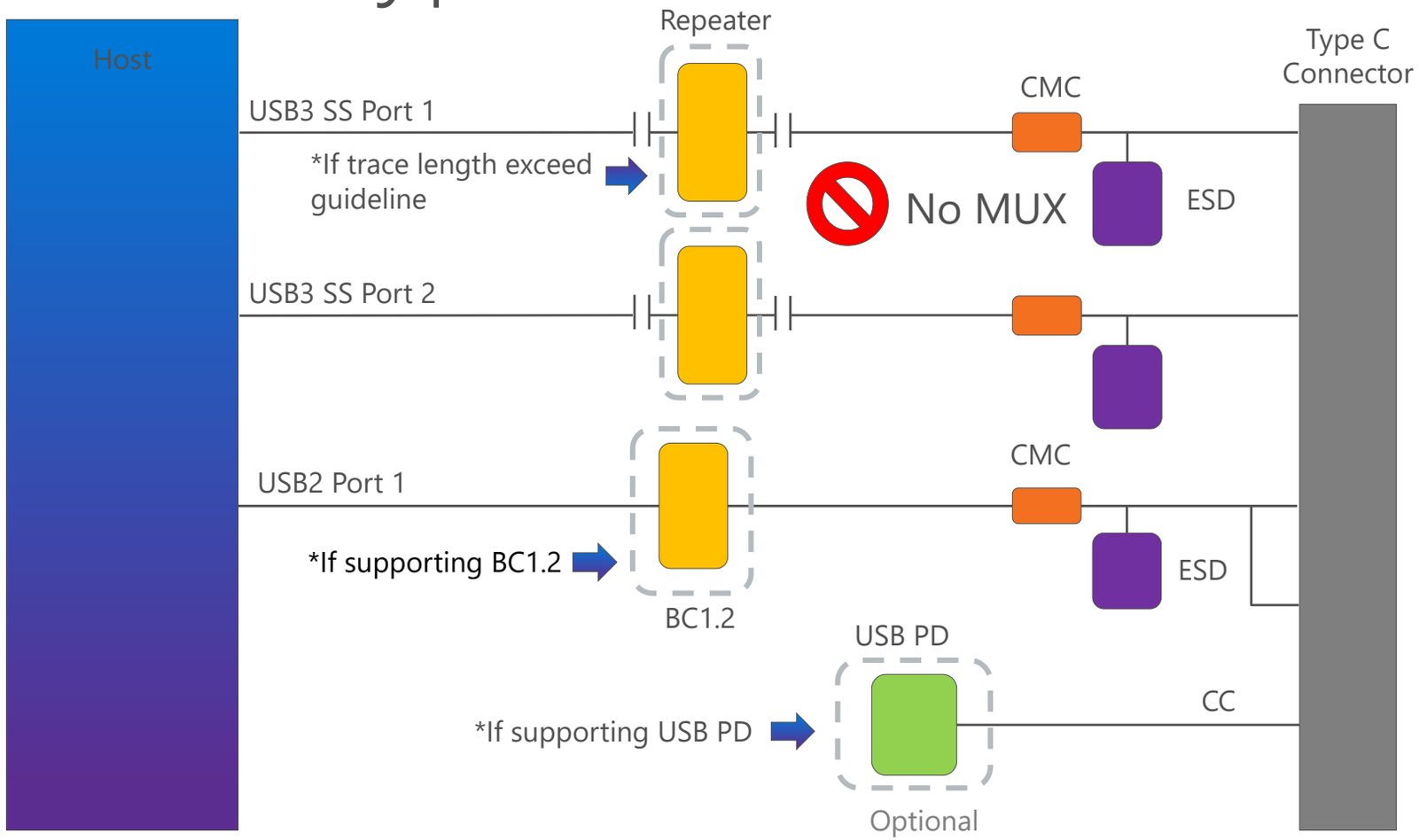

- 2 USB3 SS port + 1 USB2 ports used for each Type-C connector
- Lower cost solution at expense of additional IO port
- DO NOT need MUX and PD Controller,
- Still need to take care of Vbus/Vconn control with discrete logic or integrated controller
- Dual Role only supported if all ports support Dual Role

MUX USB Type-C Solution (USB-only)

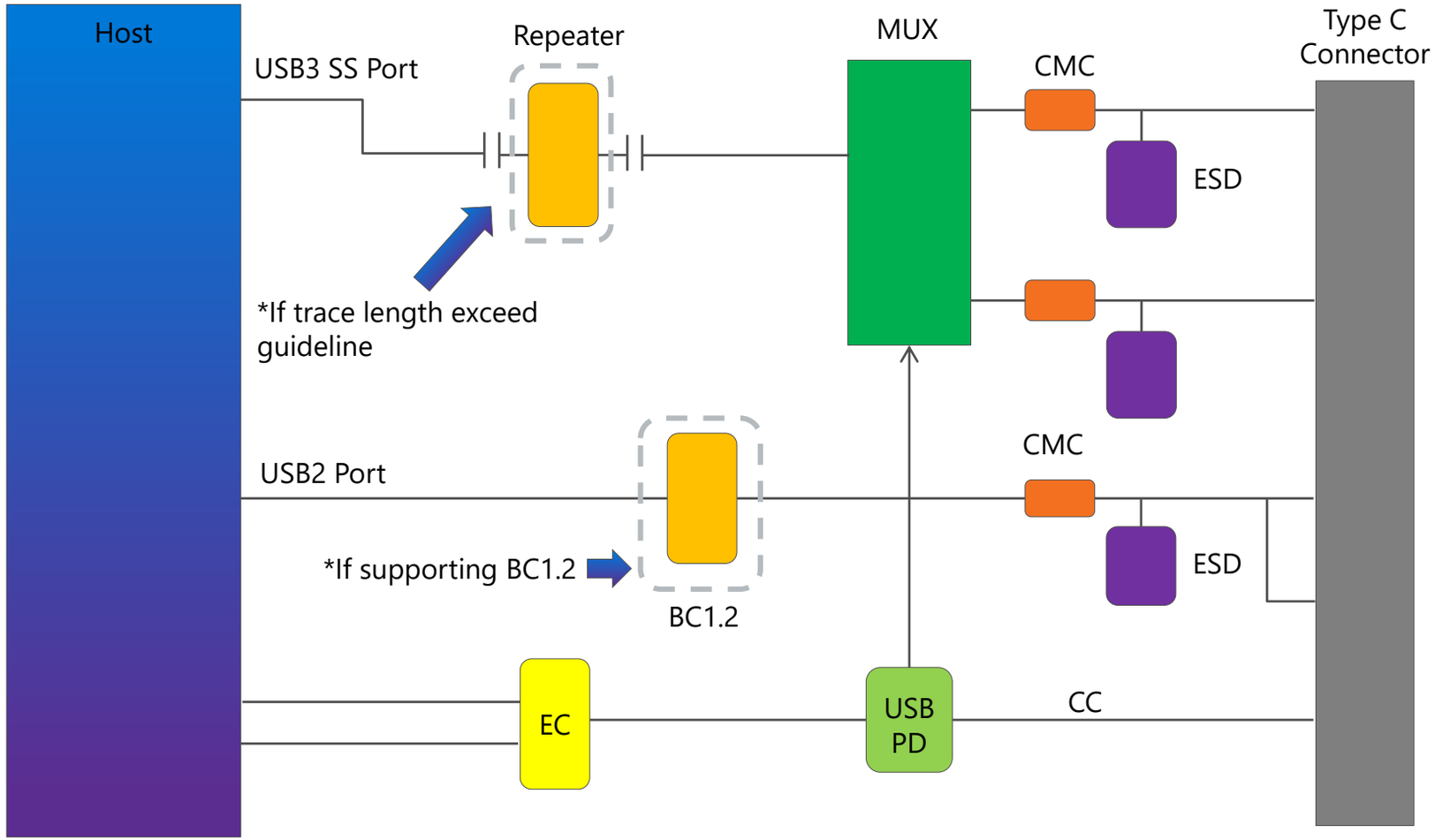

- 1 USB3 SS port + 1 USB2 ports used for each Type-C connector
- Requires a MUX and CC HW Logic
- Dual Role detection and configuration taken care of by USB PD or EC

Alternate Modes

- Baseline Functionality Requirement
  - Must provide minimum USB2 functionality
  - Allowed to configure to a new protocol at connect time using PD signaling over CC.
  - If Alternates Mode negotiation fails, device needs to present a USB Billboard Device class interface
- Spec allows up to 12 of the pins to be renegotiated for Alternate Mode use
- Examples of Alternate Modes:
  - DisplayPort
  - Thunderbolt
  - MHL
  - Any vendor-defined pin-combination
- Negotiation takes place using USB-PD messages sent over CC

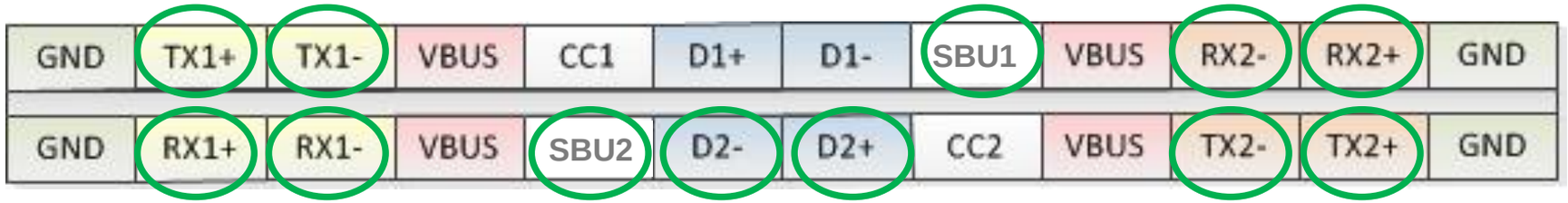

These 12 pins are candidates for renegotiation

USB Type-C Solution (USB + DP as Alt. Mode)

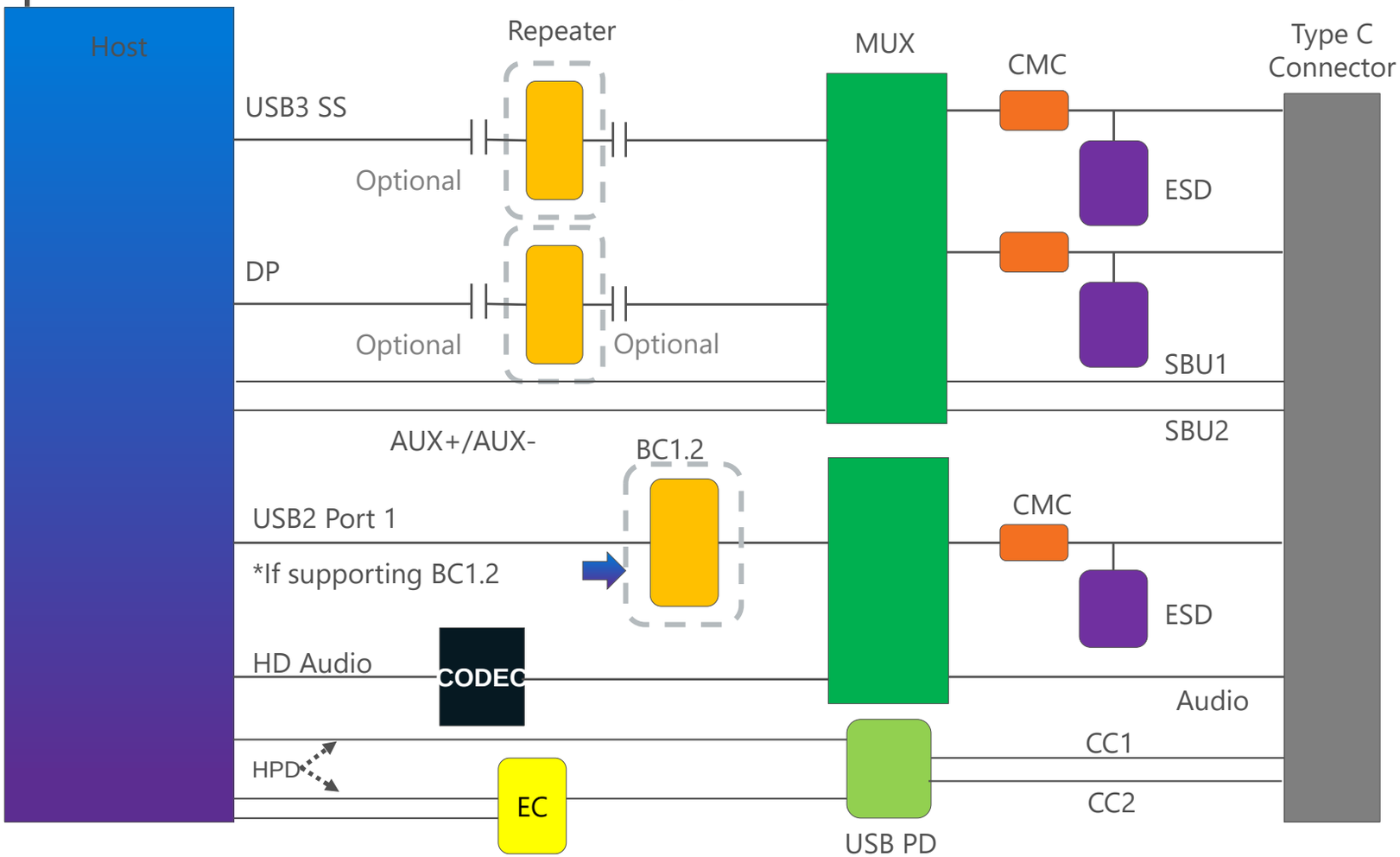

- Alternate modes must support USB PD Structured VDM to enter/exit Alternate mode
- Requires a MUX
- DP Alternate Mode pin mapping defined by VESA

Software support for Dual Role + USB Type-C in Windows 10

What is supported in Windows 10?

- Dual Role Scenarios
  - Enabling Mobile SKU platforms to connect to USB devices/peripherals
- USB Type-C Scenarios
  - Connecting to all USB Type-C peripherals
  - Faster charging via USB Type-C current and/or Power Delivery
  - Allow USB Hosts to charge from their connected USB peripherals
  - Output video/audio over USB Type-C using Alternate Modes
- Error Handling Scenarios
  - Windows will automatically detect error scenarios and provide UX to make it easier for end-users to adjust to the limitations in the new Dual Role and USB Type-C world

Dual Role Support in Windows

- USB Host support on Windows 10 Mobile devices
- Enables phones to connect to USB devices
  - Showcase: Window Continuum for Phones
- Mobile SKU will have inbox support for the most common device class drivers (see table)
- APIs that 3rd parties to write universal Windows apps for custom USB devices that USB HID, WinUSB, or serial

USB Host class drivers supported on Mobile
USB Hubs (USBHUB)
HID - Keyboard/Mice (HidClass, KBDCLass, MouClass, KBDHid, MouHid)
USB Mass Storage (Bulk & UASP)
USB Audio in / out (USBAUDIO)
Serial Devices (USBSER)
Bluetooth (BTHUSB)
Generic USB Host Driver (WinUSB)

USB Type-C Support in Windows

- Faster charging, charging directionality
- Existing battery structures allow platform to support USB Type-C current or Power Delivery charging
  - Hardware/firmware must continue to update these battery structures
- Charging policy must be implemented by the hardware/firmware
  - How much power to consume?
  - Which device should provide/consume power?
- No inbox end-user controls/UI for managing charging policies in Win10 (under investigation for a future release)
- Video/audio output over Alternate Modes
- Windows treats the Alternate Mode over USB as if it were connected using the native connector
  - Example: DisplayPort as an Alternate Mode over USB looks like a DisplayPort connector
- Alternate mode negotiation must be implemented by the hardware/firmware

Error Handling in Windows

- Dual Role errors
  - Triggered if two Desktop OS systems are connected, of if two Mobile OS devices connected
  - Windows automatically detects these dual role errors without any HW/FW changes

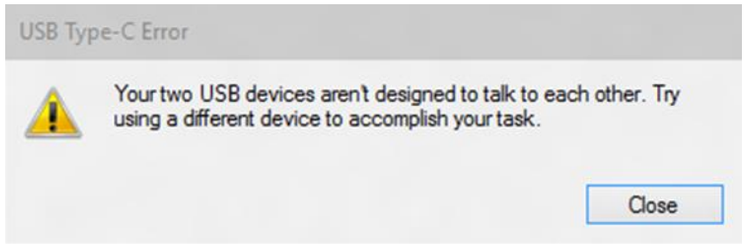

- Charger mismatch error
  - Scenario: End-user tries to charge their laptop with their phone's USB charger
  - Windows allows OEM to report their device's minimum USB Type-C charging requirements to the OS via a firmware interface

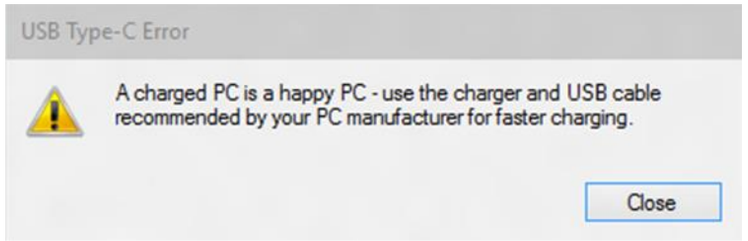

- Alternate modes error
  - Scenario: End-user connects their DisplayPort tablet to their MHL TV.
  - Windows will use Billboard device to provide an end-user troubleshooting UI

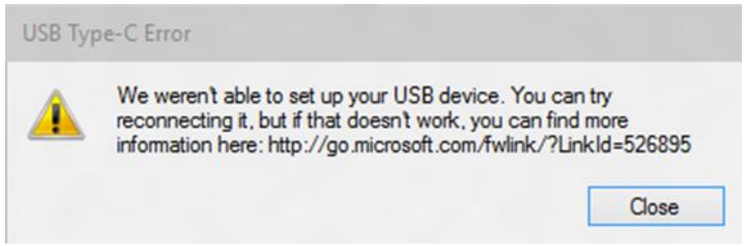

Key Requirements for OEMs, IHVs

- Interface between USB Type-C firmware and Windows
- Used to communicate the hardware's status to Windows
- Key functionality used by Windows
  - Information about if the connector resolved to a DFP or a UFP
  - Ability to initiate a Data Role swap
  - Information on charger preferences
- Billboard device
- Must be shown by the Alternate Mode peripheral if an Alternate Mode negotiation error occurs

Test tools

- SuperMUTT
  - Simulates USB traffic for USB Host testing
  - USB 2.0 and USB 3.0

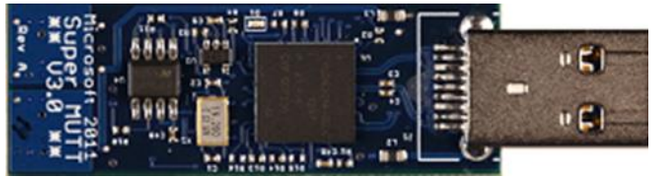

- USB-C connection exerciser
  - 1:4 switch for automating interop and scenario validation
  - Enables automated switching between hosts, chargers, peripherals
  - Monitors charging current and direction
- USB-C MUTT (in development)
  - Extends capabilities of SuperMUTT with USB-C
  - Tests Power Delivery state machine, Alternate Modes, role swapping

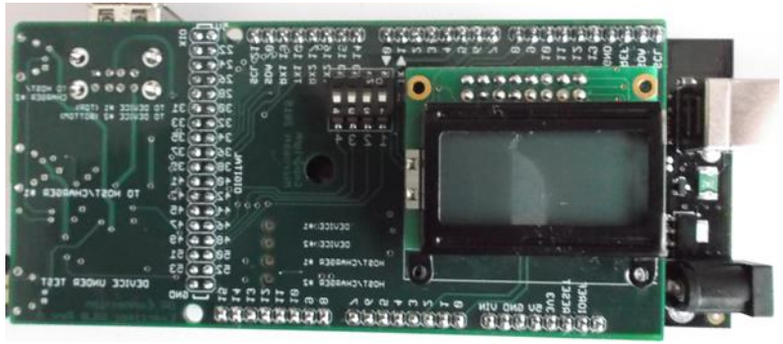

Additional information

- MSDN resources:
  - Windows USB Dual Role (Host + Function) driver architecture
  - Windows support for USB Type-C connectors
  - USB Connector Manager Class Extension API reference
  - USB-C manual interoperability test procedures
  - Microsoft USB Test Tools
- Other resources
  - UCSI rev1.0 specification

Additional info on test tools

- Test tools:
  - Microsoft USB Test Tools
  - Multi Interface Test Tool
- Obtaining tools
  - SuperMUTT
    - http://www.jjgtechnologies.com/supermutt.htm
    - http://www.pactronstore.com/index.php/products/supermutt.html
  - USB-C Connection Exerciser
    - http://www.mcci.com/mcci-v5/devtools/exerciser-type-c.html
    - www.jjgtechnologies.com/typecconne.htm
- Questions?
  - MUTTSupport@microsoft.com

When users connect to devices using USB, they expect things to “just work”

Hardware and software need to work together in order to achieve the best user experience

(c) 2015 Microsoft Corporation. All rights reserved. This document is provided "as-is." Information and views expressed in this document, including URL and other Internet Web site references, may change without notice. You bear the risk of using it. This document does not provide you with any legal rights to any intellectual property in any Microsoft product. You may copy and use this document for your internal, reference purposes.

Some information relates to pre-released product which may be substantially modified before it’s commercially released. Microsoft makes no warranties, express or implied, with respect to the information provided here.

© 2015 Microsoft Corporation. All rights reserved.